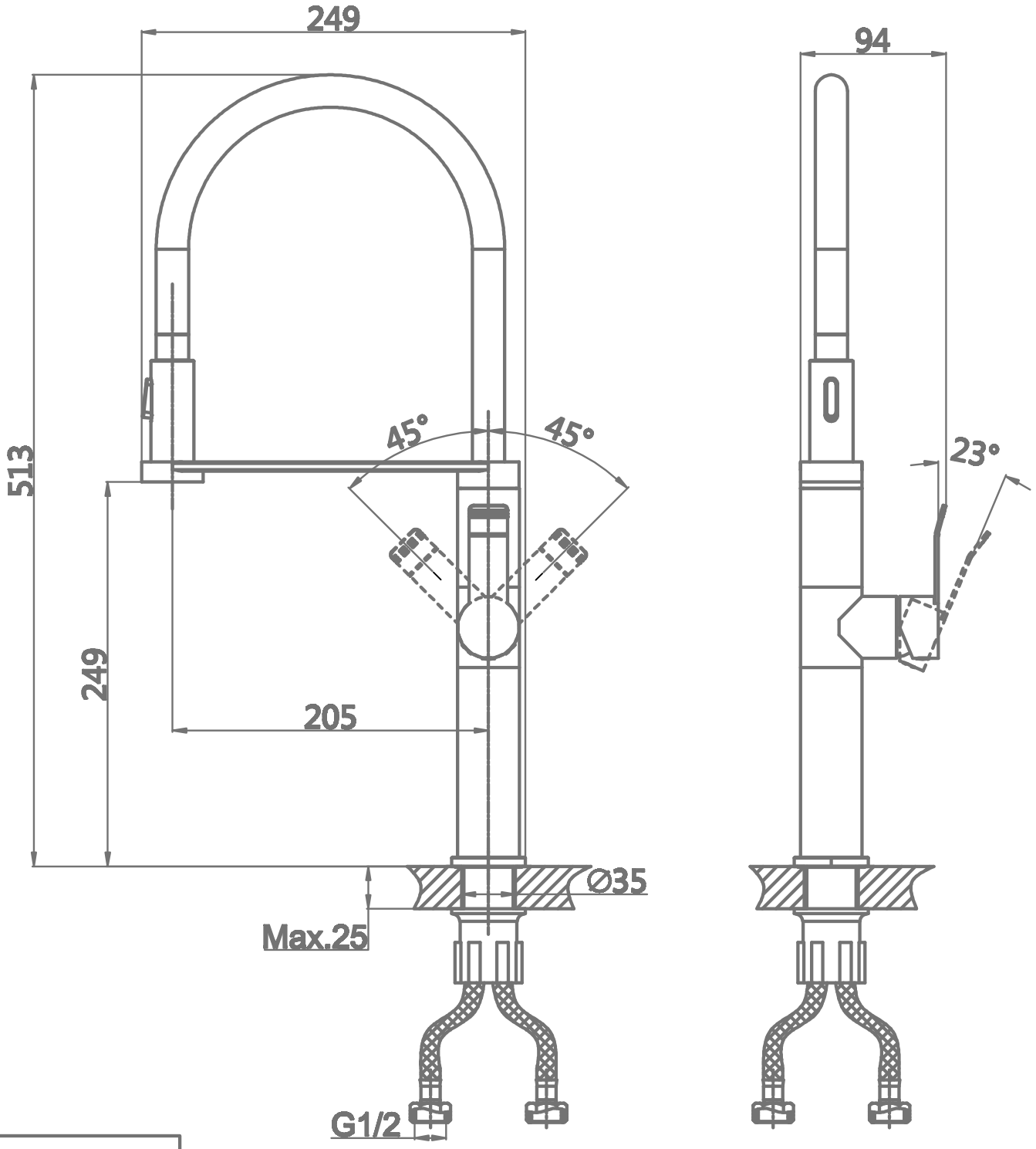

CAL51424